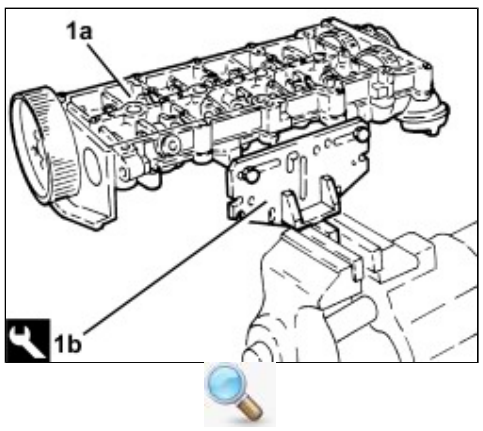

Removing (Refitting)

CAMSHAFT HOUSING

1. Position the camshaft housing (1a) in a vice using the tool (1b).

Tool	Description	Function	Validity
1860470000	Supporto	Revisione testa cilindri	2.0 JTDM

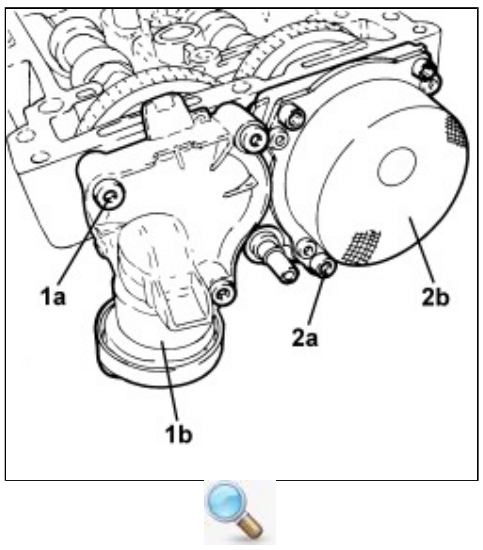

1. Undo the screws (1a) and remove the engine oil filler (1b).

- Remove the gasket.

2. Undo the screws (2a) and remove the vacuum unit (2b).

- Remove the gasket.

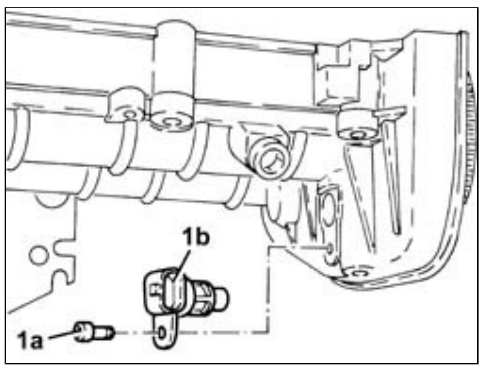

1. Undo the bolt (1a) and remove the cam angle sensor (1b).

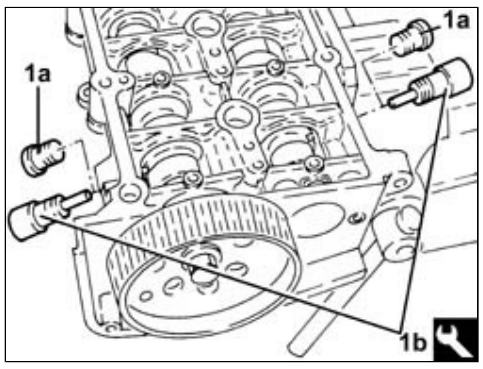

1. Remove the plugs (1a) and fit the camshaft timing tools (1b) on the camshaft housing.

Check that the tools are correctly fitted in the housings in the camshafts.

Tool	Description	Function	Validity
1870896900	Dime	Messa in fase motore	2.0 JTDM

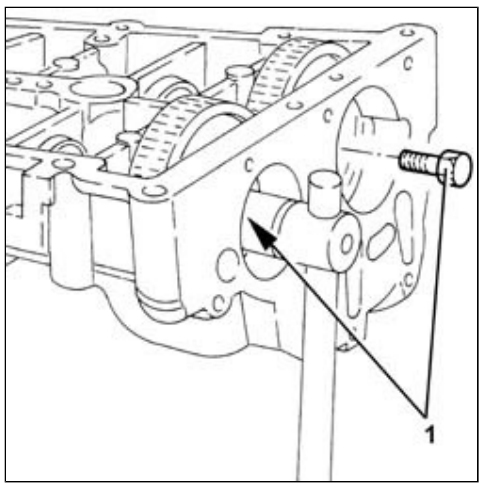

1. Undo the bolts securing the camshaft gears.

1. Undo the bolt (1a) and remove the exhaust side camshaft toothed drive pulley (1b).

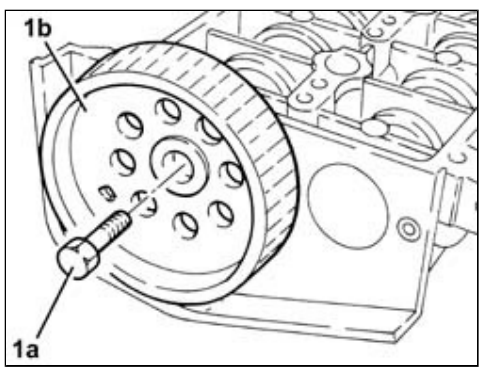

- Remove the camshaft timing tools from the camshaft housing.

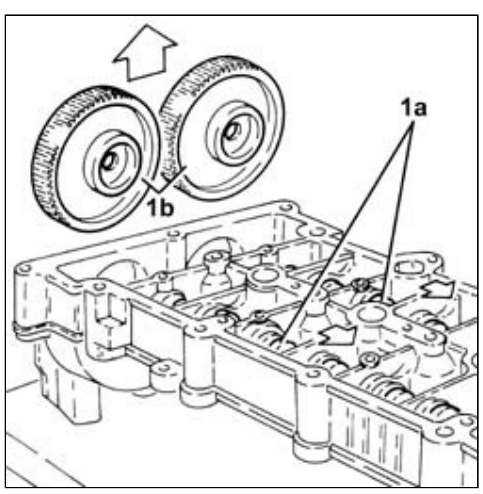

Tool	Description	Function	Validity
1870896900	Dime	Messa in fase motore	2.0 JTDM

1. Withdraw the camshafts (1a) as far as necessary and remove the camshaft gears (1b).

1. Using a suitable drift, extract the inlet side camshaft (1a) and the plug (1b).

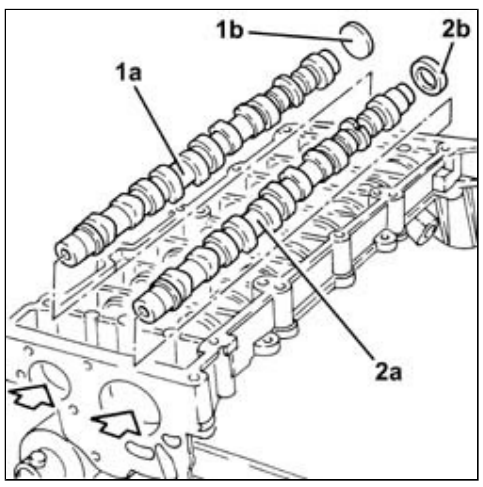

2. Using a suitable drift, extract the exhaust side camshaft (2a) and the oil seal (2b).

1. Undo and remove the engine oil lubrication duct plugs.

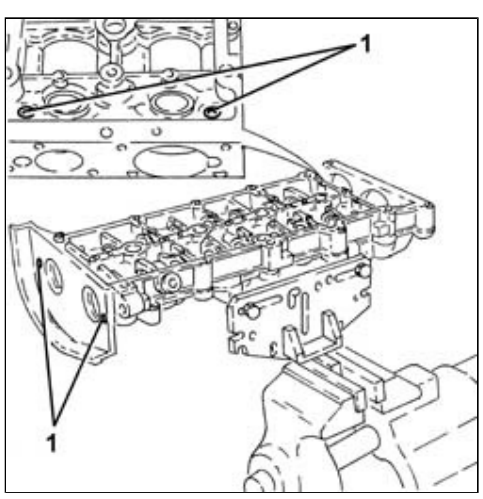

1. Position the cylinder head (1a) in a vice using the tool (1b).

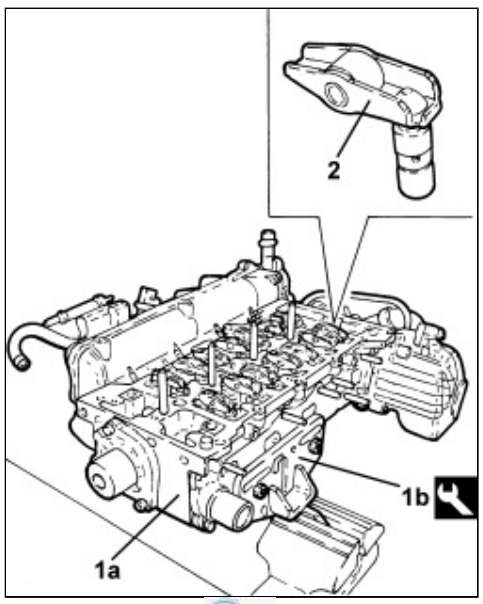

Tool	Description	Function	Validity
1860470000	Supporto	Revisione testa cilindri	2.0 JTDM

2. Remove the tappet assemblies.

1. Undo the screws (1a) and remove the exhaust gas supply pipe to the air chamber (1b) complete with O-ring.

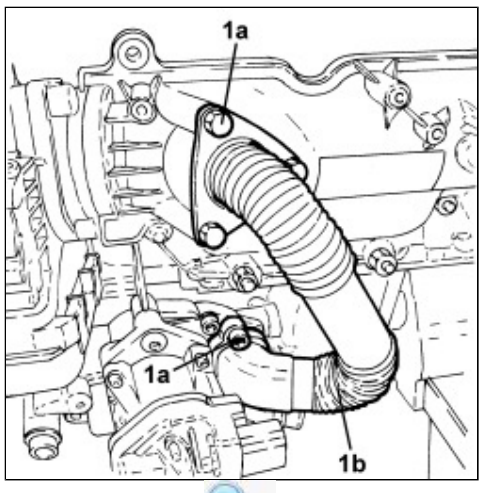

1. Undo the screws (1a) and remove the throttle body (1b).

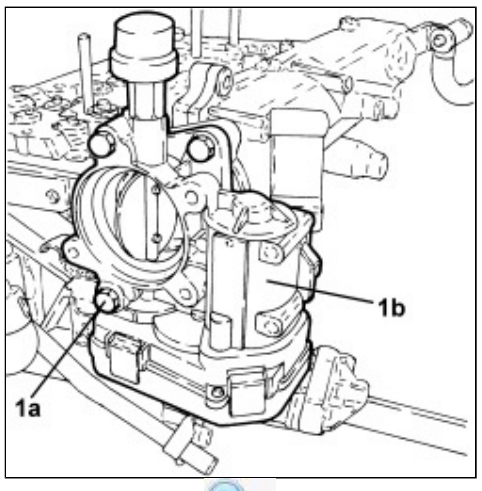

1. Undo the fastenings (1a) and remove the thermostat - EGR valve assembly (1b).

- Remove the gasket.

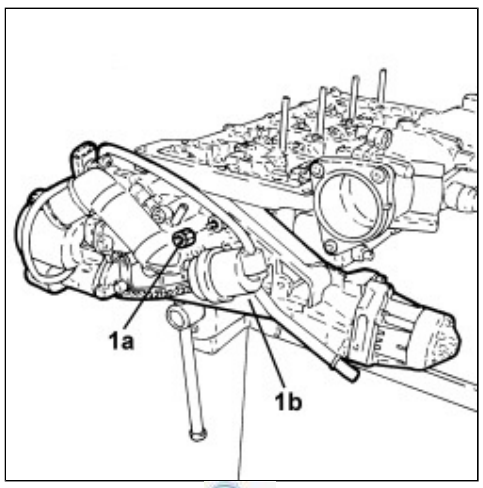

1. Undo the nuts (1a) and remove the intake chamber (1b).

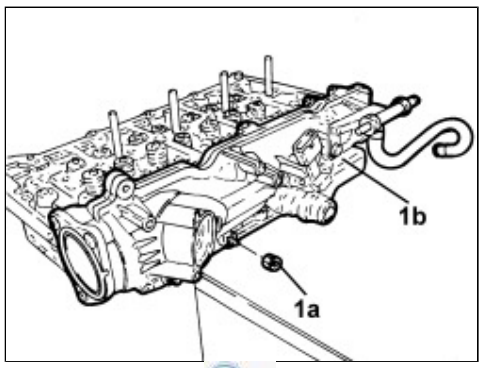

1. Undo the screws (1a) and remove the water pump return connector (1b).

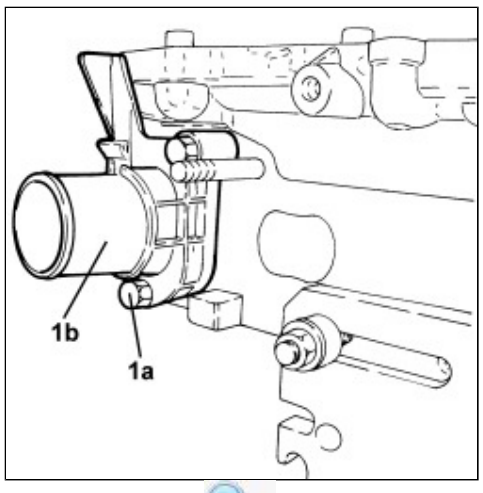

1. Undo the bolts (1a) and remove the water pump (1b).

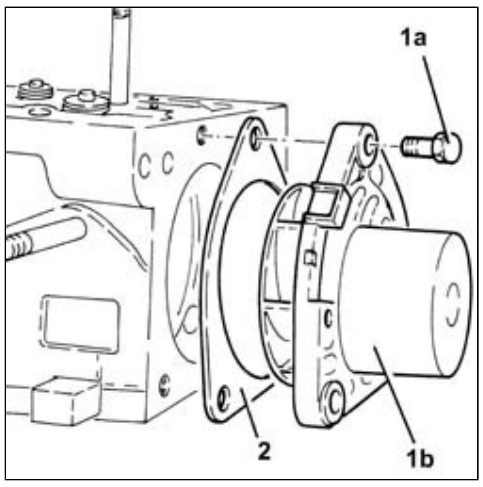

2. Open the retaining tabs and remove the gasket.

1. Fit a wooden stand on the cylinder head surface to support the valves, and secure it with bolts.

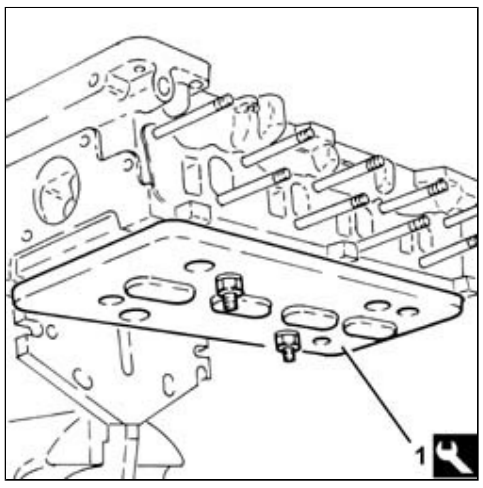

Tool	Description	Function	Validity
1860804001	Tavoletta	Smontaggio/rimontaggio valvole	2.0 JTDM

1. Remove half-cones (1a) using tools (1b) and (1c).

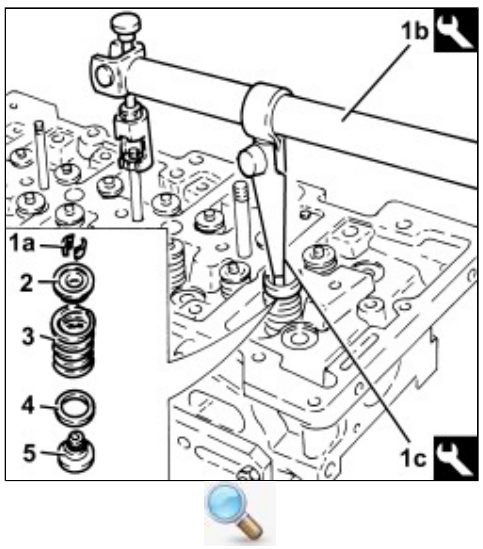

Tool	Description	Function	Validity
1860644000	Leva	Smontaggio/rimontaggio valvole	2.0 JTDM
Tool	Description	Function	Validity
2000026800	Gabbietta	Smontaggio/rimontaggio valvole	2.0 JTDM

2. Remove the valve upper shim.

3. Remove the valve spring.

4. Remove the shim (for exhaust valves only).

5. Remove the valve guide oil seal ring with built-in lower valve shim.

- Carry out the same operations on the other valves.
- Remove the wooden stand and keep the valves.

- Remove the lower cylinder head from the support tool.

- Replace the valve guides

Op. 1016E14 VALVE GUIDES FOR SINGLE CYLINDER HEAD - REPLACE DURING OP.1016E10

Refitting (Removing)

- Clean any residues from the old gasket from the lower cylinder head plane.

- Check that the flatness of the lower cylinder head lower plane corresponds to the prescribed values with reference to

Op. 1016E38 SINGLE CYLINDER HEAD OR (ONE) LEFT OR RIGHT, REMOVED - GRINDING

- Check that the valves do not show signs of grooves or meshing.

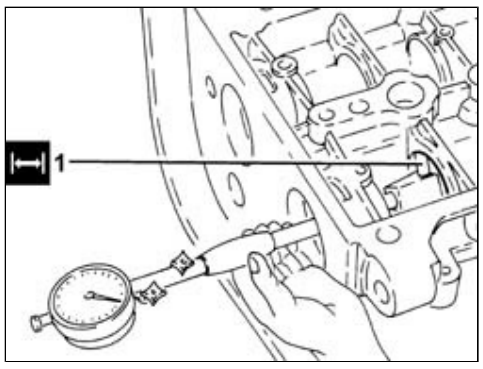

- Check that the diameter of the valve stems corresponds to the recommended figures; if not, replace the worn valves.

Size	Value	Validity
Intake valve stem diameter (mm)	4.982 ÷ 5.000	2.0 JTDM
Size	Value	Validity
Exhaust valve stem diameter (mm)	4.972 ÷ 4.990	2.0 JTDM

- Check that the length of the valve springs released is within the prescribed values.

Size	Value	Validity
Valve spring free length (mm)	44.1	2.0 JTDM

- Using a torque wrench, check that the valve spring specifications correspond to the prescribed figures; if not, replace the worn components.

Size	Value	Validity
Length of valve springs under a load of 22.80 - 25.20 daN (mm)	34.0	2.0 JTDM
Size	Value	Validity
Length of valve springs under a load of 43.90 - 48.10 daN (mm)	25.5	2.0 JTDM

- Check that the diameter of the camshaft journals corresponds to the recommended figures; if not, replace the worn camshaft.

Size	Value	Validity
Camshaft first journal diameter (mm)	43.600 ÷ 43.615	2.0 JTDM
Size	Value	Validity
Camshaft second journal diameter (mm)	43.400 ÷ 43.415	2.0 JTDM
Size	Value	Validity
Camshaft third journal diameter (mm)	43.200 ÷ 43.215	2.0 JTDM

Size	Value	Validity
Camshaft fourth journal diameter (mm)	43.000 ÷ 43.015	2.0 JTDM
Size	Value	Validity
Camshaft fifth journal diameter (mm)	30.000 ÷ 30.015	2.0 JTDM

- Check that the nominal camshaft cam lift corresponds to the recommended figures; if not, replace the worn camshaft.

Size	Value	Validity
Camshaft end float (mm)	0.100 ÷ 0.230	2.0 JTDM
Size	Value	Validity
Nominal exhaust cam lift (mm)	8.0	2.0 JTDM

1. Check that the diameter of the camshaft supports corresponds to the recommended figures; if not, replace the cylinder head.

Size	Value	Validity
Camshaft first support diameter (mm)	43.646 ÷ 43.671	2.0 JTDM
Size	Value	Validity
Camshaft second mounting diameter (mm)	43.446 ÷ 43.471	2.0 JTDM
Size	Value	Validity
Camshaft third support diameter (mm)	43.246 ÷ 43.271	2.0 JTDM
Size	Value	Validity
Camshaft fourth support diameter (mm)	43.046 ÷ 43.071	2.0 JTDM
Size	Value	Validity
Camshaft fifth support diameter (mm)	30.045 ÷ 30.070	2.0 JTDM

- The outer diameter of the valve housings is as follows.

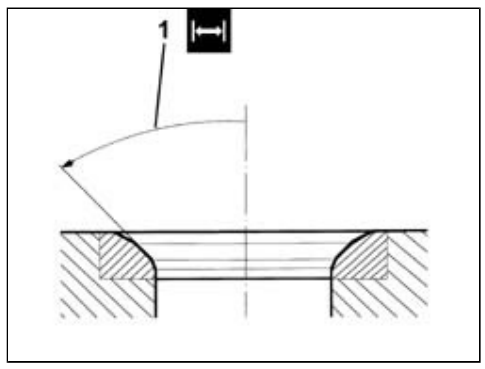

Size	Value	Validity
Intake valve seat outer diameter (mm)	29.600 ÷ 29.611	2.0 JTDM
Size	Value	Validity

Exhaust valve seat outer diameter (mm)	26.100 ÷ 26.111	2.0 JTDM

1. Grind the valve seats to the prescribed size.

Size	Value	Validity
Valve seat band angle in contact with valves - inlet	45° 30’ +/- 1°	2.0 JTDM

- Grind the valve seats using a suitable tool.

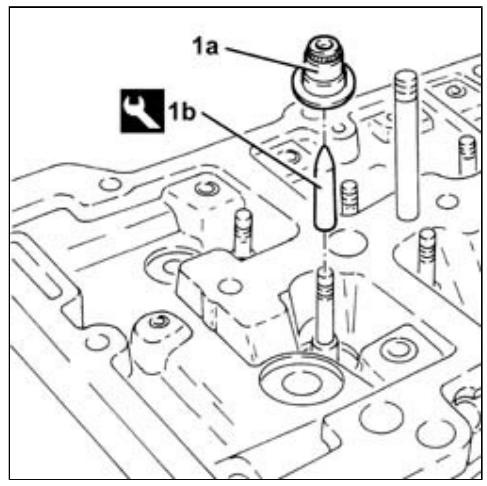

LOWER CYLINDER HEAD

- Position the lower cylinder head in the vice using the tool.

Tool	Description	Function	Validity
1860470000	Supporto	Revisione testa cilindri	2.0 JTDM

- Fit the valves in the seats, then support them using the wooden stand and secure it using suitable bolts.

Tool	Description	Function	Validity
1870897100	Estrattore/Introduttore	Estrazione/Introduzione guidavalvole Introduzione paraolio guidavalvole	2.0 JTDM

1. Place the valve guide oil seal (1a) in position using the tool (1b).

Tool	Description	Function	Validity
1870897100	Estrattore/Introduttore	Estrazione/Introduzione guidavalvole Introduzione paraolio guidavalvole	2.0 JTDM

- Place the shim in position (for exhaust valves only).

- Fit the valve spring in its seat.

- Refit the upper valve shim.

- Place the cotters in their seats with the lever and chamber used for the removal.

- Carry out the same operations on the other valves.
- Remove the wooden stand for supporting the valves from the cylinder head plane.

- Place a new gasket on the water pump and fold the retaining tabs over.

- Refit the water pump, complete with gasket, in its housing and secure it by tightening the screws to the prescribed torque.

Component	Fastening	Ø	Value (daNm)	Validity
Water pump	Screw (to be replaced)	M8	2.3 ÷ 2.8	2.0 JTDM

- Place the water pump return connector, complete with new gasket, in position and tighten the screws.

- Refit the intake chamber in its housing and tighten the nuts to the prescribed torque.

Component	Fastening	Ø	Value (daNm)	Validity
Air chamber	Nut	M8	2.3 ÷ 2.8	2.0 JTDM

- Place the thermostat - EGR valve assembly in position complete with new gasket and tighten the fastenings.

- Refit the throttle body and tighten the screws to the prescribed torque.

Component	Fastening	Ø	Value (daNm)	Validity
Throttle body	Screw	M6	0.8 ÷ 1.0	2.0 JTDM

- Place the air chamber exhaust gas supply pipe in position complete with new O-ring and tighten the screws.

Before fitting the pipe, bathe the rubber gasket in soapy water and tighten all the fixing screws before their definitive tightening.

- Place the hydraulic tappets complete with rocker arms in their housings.
- Remove the lower cylinder head from the support tool.

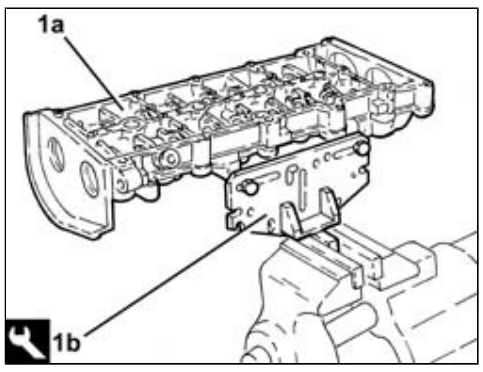

CAMSHAFT HOUSING

1. Position the camshaft housing (1a) in a vice using the tool (1b).

Tool	Description	Function	Validity
1860470000	Supporto	Revisione testa cilindri	2.0 JTDM

- Tighten the engine oil lubrication duct plugs.

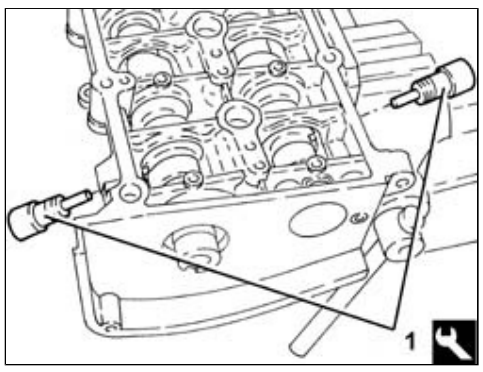

- Place the camshafts in their housings.

- Refit the camshaft gears in their housings and secure them without tightening the bolts.

1. Fit the camshaft timing tools.

Check that the tools are correctly fitted in the housings in the camshafts.

Tool	Description	Function	Validity
1870896900	Dime	Messa in fase motore	2.0 JTDM

1. Tighten the camshaft gear bolts to the prescribed torque.

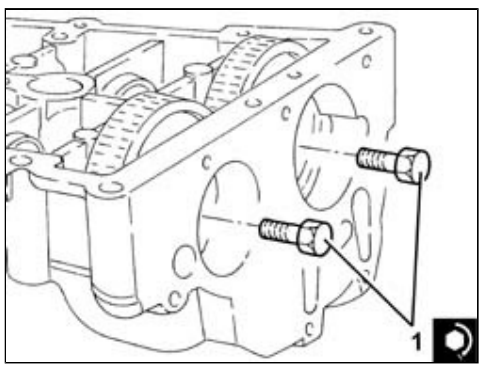

Component	Fastening	Ø	Value (daNm)	Validity
Camshaft gears	Screw	M12	2.9 ÷ 3.2 + 40°	2.0 JTDM

1. Fit the exhaust side camshaft front oil seal (1a) using the tool (1b).

Tool	Description	Function	Validity
1870896800	Introduttore	Introduzione paraolio anteriore albero distribuzione lato	2.0 JTDM

		scarico	

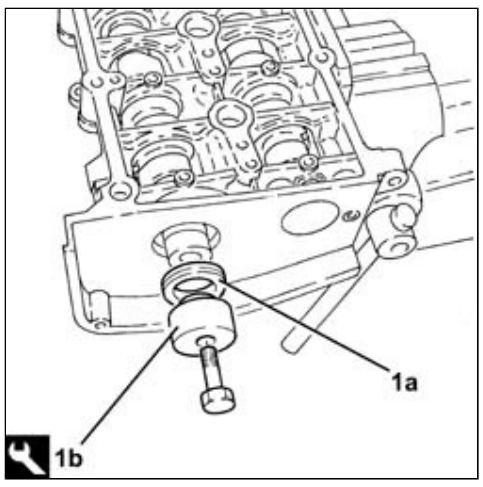

- Fit the inlet side camshaft plug.

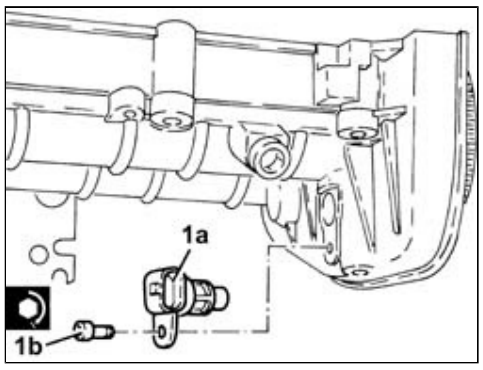

- Place the exhaust side camshaft toothed drive pulley in its housing and secure it without tightening the bolt.

1. Position the cam angle sensor (1a) in its housing and secure it by tightening the screw (1b) to the prescribed torque.

Component	Fastening	Ø	Value (daNm)	Validity
Cam angle sensor	Screw	M6	0.8 ÷ 1.0	2.0 JTDM

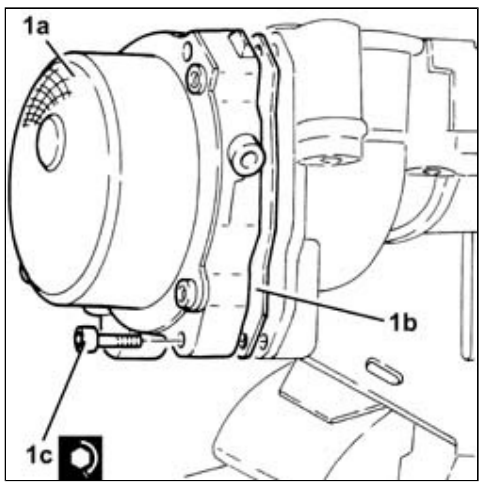

1. Fit the vacuum pump (1a), complete with gasket (1b), back in its housing and secure it by tightening the screws (1c) to the prescribed torque.

Component	Fastening	Ø	Value (daNm)	Validity
Vacuum unit	Screw	M8	1.8 ÷ 2.2	

- Place the engine oil filler fitting in its housing complete with gasket and secure it by tightening the screws to the prescribed torque.

Component	Fastening	Ø	Value (daNm)	Validity
Engine oil filler	Screw	M6	0.8 ÷ 1.0	2.0 JTDM

- Remove the support tool complete with camshaft housing from the vice and separate them.